GENERAL INFORMATION
Table of Contents - Section 100

PARAGRAPH		PAGE
100.0	**INTRODUCTION**	**1**
100.1	GENERAL STATEMENT	1
100.2	PURPOSE	1
100.3	SCOPE	1
100.4	SERVICE AND LIMITATIONS	1
100.5	CODES AND STANDARDS	1
100.6	CUSTOMER SERVICES	1
100.7	RATE SCHEDULES	1
100.8	REQUESTS FOR INFORMATION	2
100.9	INSPECTION APPROVAL AND PERMITS	2
100.10	IDENTIFICATION OF JOB SITE	2
100.11	DESIGN OF CUSTOMER'S EQUIPMENT	2
100.12	BEFORE YOU DIG	2
100.13	ATTACHMENTS ON APS POLES	3
100.14	IDENTIFICATION OF EMPLOYEES	3
100.15	PROTECTION OF APS EQUIPMENT	3
100.16	DE-ENERGIZING THE SERVICE ENTRANCE	3
100.17	ENERGY THEFT	3
100.18	WORKING SAFE NEAR APS FACILITIES	4
101.0	**ABBREVIATIONS**	**8**
102.0	**DEFINITIONS**	**8**
102.1	AGENT	8
102.2	APPLICANT	8
102.3	APPROVED	8
102.4	BASEMENT	8
102.5	BUILDING	8
102.6	CLEARANCE	8
102.7	DISTRIBUTED GENERATION/GENERATOR	8
102.8	APS	9
102.9	CONTRACTOR	9
102.10	CURRENT TRANSFORMER METERING-DEFINED	9
102.11	CUSTOMER	9
102.12	FIRST FLOOR	9
102.13	HIGH RISE BUILDING	9
102.14	METER	9
102.15	METER ROOM	9
102.16	MULTIPLE METER CENTER	9

PARAGRAPH		PAGE
102.17	NOMINAL VOLTAGE	9
102.18	POINT OF ATTACHMENT	9
102.19	POINT OF DELIVERY	9
102.20	READILY ACCESSIBLE	10
102.21	RECOGNIZED TESTING LABORATORY	10
102.22	SELF-CONTAINED METERS	10
102.23	SELF-CONTAINED METER SOCKETS	10
102.24	SERVICE ENTRANCE	10
102.25	SERVICE ENTRANCE SECTION	10
102.26	SERVICE DROP	10
102.27	SERVICE ENTRANCE CONDUCTORS OVERHEAD SYSTEM	10
102.28	SERVICE ENTRANCE CONDUCTORS - UNDERGROUND SYSTEM	10
102.29	SWITCHBOARD	10
102.30	SWITCHGEAR	11
102.31	TEMPORARY SERVICE	11
102.32	THIRD PARTY	11
102.33	VENTILATED	11
102.34	TOTALIZED METERING	11
103.0	**ELECTRICAL TERMS**	**11**
103.1	WATTS	11
103.2	KILOWATT (kw)	11
103.3	KILOWATT-HOUR (kwh)	11
103.4	HORSEPOWER (hp)	11
103.5	VOLTAGE (E)	11
103.6	CURRENT (I)	11
103.7	AMPACITY	11
103.8	APS VEHICLE ACCESS	12
104.0	**SPECIAL CONSIDERATIONS**	**12**
104.1	RESPONSIBILITY: USE OF SERVICE OR APPARATUS	12
104.2	LINE DISTURBANCES	12
104.3	MOTOR STARTING	12
104.4	SERVICE INTERRUPTIONS	13
104.5	POLYPHASE MOTOR PROTECTION	13
104.6	COMPUTER PROTECTION	13
104.7	SIGNAL DISTORTION	13
104.7-1	HARMONIC STUDY POLICY	14

PARAGRAPH		PAGE
104.8	AIR CONDITIONING - REMOTE (SPLIT) SYSTEMS	15
104.9	CONTROL CIRCUITS	15
104.10	SPECIAL CASE TESTING	15
104.11	CUSTOMER GENERATION	15
104.11-1	EMERGENCY OR STANDBY GENERATORS	16
104.11-2	INTERCONNECTED GENERATORS	18
104.12	PROTECTION AND ISOLATION REQUIREMENTS FOR MULTIPLE UTILITY SERVICES TO A CUSTOMER FACILITY	19
104.12-1	INTERLOCKS	20
104.12-2	ISOLATION DEVICES	20
104.12-3	**MULTIPLE UTILITY SERVICES TRANSFER EQUIPMENT**	21
105.0	SPECIAL WORK REQUEST FOR THIRD PARTIES	22

100.0 INTRODUCTION

100.1 GENERAL STATEMENT

The Arizona Public Service APS has on file with the Arizona Corporation Commission its rates, regulations and extension policies, copies of which are open for inspection by the public at any APS business office.

The following are brief statements of those operating rules and practices which affect the majority of connections made to the APS lines. **Where information not included herein is needed, representatives of APS will provide assistance.**

100.2 PURPOSE

The APS Electric Service Requirements Manual (ESRM) presents information and general specifications relative to the introduction and use of electricity supplied from its lines. This manual is intended as a guide in making electrical installations to protect the interest of the Customer and to comply with regulations which experience has shown to be necessary for safe, adequate, and satisfactory service.

100.3 SCOPE

The information and specifications included herein cover conditions and equipment connecting Arizona Public Service Company's electrical supply system to the Customer's premises. Subjects relative to this service are also presented for the mutual interest of the Customer and his representatives. **It is not a complete set of rules governing the installation of electrical wiring and equipment.**

100.4 SERVICE AND LIMITATIONS

Service will be rendered to the Customer from the nearest suitable line of sufficient capacity to furnish adequate service at the phase and voltage available. Service shall not be used by the Customer for purposes other than that specified in the applicable rate. ELECTRICAL ENERGY PURCHASED FROM APS SHALL NOT BE RESOLD.

100.5 CODES AND STANDARDS

The ESRM requirements are supplementary to and are not intended to conflict with the currently applicable National Electric Safety Code, National Electric Code, Municipal, County or State Codes, Ordinances or regulations within the State of Arizona, Federal regulations, or Standards (e.g., ANSI, EUSERC, IEEE, NEMA, NFPA, UL).

Note: When reference is made within the ESRM to any codes, standards or regulations, it shall refer to the latest revision of same.

100.6 CUSTOMER SERVICES

APS Service Representatives will gladly provide you with useful information on the wise use of energy, electric heating, heat pumps, refrigeration, water heaters, residential and commercial lighting, security lighting, home economy, etc.

100.7 RATE SCHEDULES

Upon request of application, representatives of APS will explain rate schedules and assist in selection of the rate best suited to applicant's requirements. Where more than one rate is applicable, applicant will be responsible for the final selection of the applicable rate schedules desired.

Certain rates such as totalized metering and special rates for medium and high voltage customers require prior approval from the Totalized Metering Committee. Contact your APS representative for more information.

100.8 REQUESTS FOR INFORMATION

APS representatives will explain requirements and give advice with regard to the installation of electric service.

By calling APS before any installation is started, service plans may be coordinated, preventing costly changes and resulting in more rapid completion of the job.

100.9 INSPECTION APPROVAL AND PERMITS

On new installations, or where changes necessitate relocating or replacing APS meters, or when an installation has been disconnected by APS or the Fire Department because of fire or other damage, **APS shall not energize or restore service until the wiring has been approved and proper notification given to APS by the inspection authorities where such inspection is required.**

In areas where local inspection is not required, the service entrance including grounding and bonding shall be in accordance with APS requirements and the National Electrical Code. The above equipment shall be inspected and approved by an APS representative prior to service being energized.

APS SHALL NOT BE UNDER ANY OBLIGATION TO INSPECT THE WIRING OR APPLIANCES OF THE CUSTOMER. WHERE APS HAS REASON TO BELIEVE THAT THE WIRING OR APPLIANCES ARE UNSAFE, AND DO NOT COMPLY WITH THE NATIONAL ELECTRICAL CODE, LOCAL OR COUNTY CODES OR ORDINANCES, APS MAY REFUSE OR DISCONTINUE ELECTRIC SERVICE UNLESS REQUIRED CHANGES HAVE BEEN MADE.

100.10 IDENTIFICATION OF JOB SITE

The customer shall furnish to APS an exact street number corresponding to the job location. In the case of mobile home or recreation vehicle subdivisions, the space or lot number must also be furnished. This street/space number shall also be posted in a conspicuous location at the job site to assist APS personnel in performing their work as scheduled to meet the service date for the customer. The customer shall also install a permanent address number/space when the job is completed. To avoid delays in setting a meter and energizing a service, the address must agree with the address on the electrical permit and subsequent final clearance.

100.11 DESIGN OF CUSTOMER'S EQUIPMENT

The provision for adequate electrical capacity must be made by the customer. As a public utility, APS cannot design, plan, install or maintain the customer's wiring, electrical equipment or other customer owned facilities. Compliance with the National Electrical Code or local municipal or county codes assures only that the installation will conform to recognized minimum safe practices. An electrical engineer and/or a qualified electrical contractor should aid the customer in determining that his electrical installation will have adequate capacity for future use.

100.12 BEFORE YOU DIG

To comply with state law and OSHA, you must check with Blue Stake and other utilities who are not Blue Stake participants, but who may have underground facilities in your excavation area. You can save time, money and avoid hazards, prevent interruption of utility service and eliminate construction delays by getting underground utilities staked out in your excavation area prior to any digging.

APS is a participant in the Blue Stake Center. Call 602-263-1100 in Maricopa County or your local APS office in other areas, at least two (2) working days before you dig.

100.13 ATTACHMENTS ON APS POLES

APS forbids all unauthorized attachments, including posters, fences and signs, to its poles, equipment or property. APS will remove all such unauthorized attachments or installations without notice and may prosecute any such trespass.

100.14 IDENTIFICATION OF EMPLOYEES

APS employees authorized to visit a Customer's premises are furnished with an identification which they will show upon request. This is done to protect the Customer from unauthorized persons representing APS.

100.15 PROTECTION OF APS EQUIPMENT

It is understood that any of the APS equipment located on the Customer's premises shall be adequately protected against damage. The Customer is responsible for any damage or loss resulting from improper protection or loss resulting from improper protection or neglect.

100.16 DE-ENERGIZING THE SERVICE ENTRANCE

No person other than authorized employees of APS may break seals, move, relocate or replace meters and other equipment owned by APS. If de-energizing is needed, contact your local APS office to make arrangements. In other than an emergency situation, three (3) days advance notice is required to de-energize a service. There may be a charge to accomplish the above.

100.17 ENERGY THEFT

Under no circumstances shall devices or attachments be connected to APS facilities in such manner as to permit the use of unmetered energy, except in emergencies when authorized and done only by authorized APS employees. Under Arizona law, tampering with the property of a utility and theft of electricity having a value of more than $100 are felonies punishable by a fine of up to $150,000 and/or imprisonment.

100.18 WORKING SAFE NEAR APS FACILITIES

When a party plans to do construction or repair work where personnel or equipment will be used under or near APS electric transmission or distribution facilities, that party must obtain from APS a "Special Work Permit" designating the limits of the safe working area. APS facilities or equipment will not be disconnected or re-energized without the issuance of a Special Work Permit and clearance for third parties; nor if the net result of the construction causes APS to be in violation of any code.

TABLE A: MINIMUM APPROACH DISTANCE BETWEEN POWER LINES AND CRANES AND DERRICKS

POWER LINE VOLTAGE	MINIMUM APPROACH DISTANCE FOR CRANE OR DERRICK, LOAD, AND LOAD LINE
Up to 50,000 volts	10 feet
Over 50,000 volts up to 200,000 volts	15 feet
Over 200,000 volts up to 350,000 volts	20 feet
Over 350,000 volts up to 500,000	25 feet

*Cranes & Derricks must maintain 20 foot clearance up to 350kV, and 50 feet above 350kV. If this clearance cannot be maintained, contact the APS Public Safety Department for assistance @ 602-250-3418

TABLE B: MINIMUM APPROACH DISTANCE BETWEEN ENERGIZED LINE/EQUPIMENT AND PEOPLE, MATERICALS, AND NON-CRANE EQUIPMENT

ENERGIZED LINE VOLTAGE	MINIMUM APPROACH DISTANCE
Up to 50,000 volts	10 feet
Over 50,000 volts up to 69,000 volts	11 feet
Over 69,000 volts up to 115,000 volts	13 feet
Over 115,000 volts up to 161,000 volts	14 feet
Over 161,000 volts up to 230,000 volts	16 feet
Over 230,000 volts up to 345,000 volts	20 feet
Over 345,000 volts up to 500,000 volts	25 feet

APS PROCEDURE FOR DISCONNECTING AND RE-ENERGIZING POWER LINES

YOU, as the Requesting Party:

1 Contact APS before beginning work near APS facilities (lines, transformers, etc.) for de-energizing such facilities.

2 Arrange to have your authorized representative meet an APS representative at the job site.

3 Sign a Request for Special Work Permit at the job site.

4 After completion of work, for re-energizing those facilities, request a Release of Special Work Permit from APS.

5 Arrange to have your authorized representative meet an APS representative at the job site.

6 Sign a Release of Special Work Permit at the job site.

If you have a question, please contact your Local APS office, or call Phoenix @ 602-250-3418, APS Public Safety Services

APS Representative:

1 Receive the call requesting a Special Work Permit to de-energize APS facilities.

2 Assign a number to the request and arrange for a date and time for an on-site meeting with an authorized representative of requesting parties.

3 Prepare a Special Work Permit Form #357-00B. Also, obtain signature of requesting party, sign for APS, and distribute copies as listed.

4 De-energize the requested facilities, making sure the requesting party is aware of safe working area.

5 Receive the call from the requesting party after completion of the work, to re-energize APS facilities.

6 Arrange for an on-the-job site meeting with the requesting party's authorized representative.

7 Re-energize APS facilities that were de-energized under the Special Work Permit.

8 Prepare the Release of Special Work Permit Form #357-00C, obtain signature of the requesting party, sign for APS, and distribute copies as listed

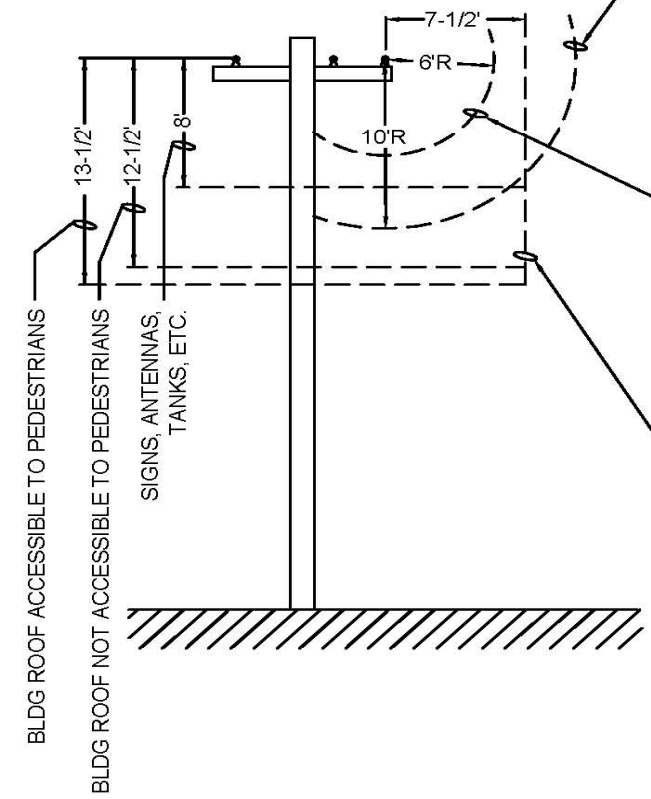

OCCUPATIONAL SAFETY HEALTH ADMINISTRATION WORKING CLERANCE REQUIREMENT FOR MACHINERY AND PEOPLE, AND ARIZONA STATUTE WORKING CLEARANCE REQUIREMENT FOR MACHINERY

NO MACHINE OR ANYTHING ATTACHED TO THE MACHINE, INCLUDING THE LOAD AND "TAG LINE", MAY BE BROUGHT WITHIN THIS RADIUS UNLESS LINE IS DE-ENERGIZED. A PERSON MAY NOT GET ANY POTION OF HIS BODY OR ANYTHING HE'S HANDLING WITHIN THIS RADIUS. LINES RATED OVER 50KV REQUIRE ADDITIONAL CLEARANCE.

ARIZONA STATUTE WORKING CLEARANCE REQUIREMENT FOR A PERSON:

A PERSON MAY NOT GET ANY PORTION OF BODY, TOOLS OR MATERIAL HE'S HANDLING WITHIN THIS RADIUS UNLESS LINE IS DE-ENERGIZED. LINES RATED OVER 50 KV REQUIRE ADDITIONAL CLEARANCE. (THIS CLEARANCE IS ONLY APPLIED WHERE THE PERSON WORKING ISN'T SUBJECT TO OSHA REGUALTIONS.)

NATIONAL ELECTRIC SAFETY CODE MINIMUM CLEARANCE REQUIREMENT.

NO PORTION OF A BUILDING, SIGN, OR OTHER OBJECT MAY BE WITHIN THIS BOUNDARY. CLEARANCES SHOWN ARE ILLUSTRATIVE ONLY AND VARY WITH VOLTAGE LEVELS, WIND AND OTHER CONDITIONS. SEE SECTION 234 FO THE 1993 NESC AND APS T&D CONSTRUCTION STANDARDS, PAGE 1144 FOR SPECIFIC CLEARANCE REQUIREMENTS.

NOTE: THIS DRAWING IS ONLY INTEDNDED TO SHOW THE RELATIONSHIP OF THE NATIONAL ELECTRIC SAFETY CODE, OSHA, AND ARIZONA STATUTE WORKING CLEARANCE REQUIREMENTS. REFER TO THE PROPER CODE OR REGULATION FOR A SPECIFIC INSTALLATION.

RELATIONSHIP OF NESC, OSHA AND ARIZONA STATUTE CLEARANCE REQUIRMENTS AT THE SPAN

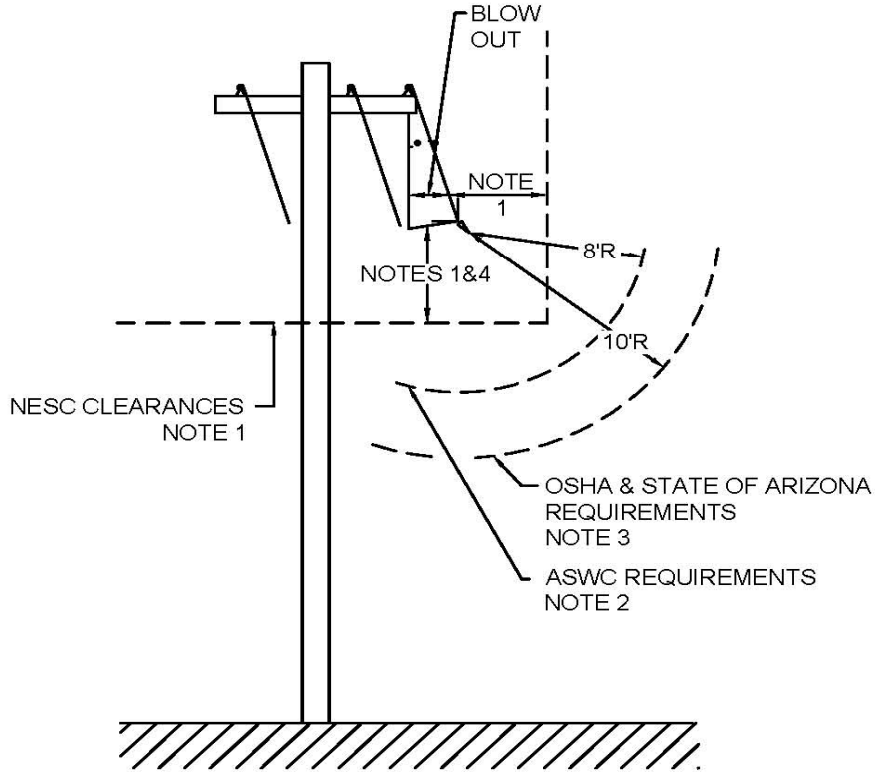

CONSTRUCTION NOTES:

1. NO PORTION OF A BUILDING MAY BE WITHIN THIS BOUNDARY. SEE APS T&D STANDARD 1144 FOR DETAILS.

2. FOR NON-APS PERSONNEL, ARIZONA STATUTE WORKING CLEARANCE (ASWC) REQUIRES THAT A PERSON MAY NOT GET ANY PORTION OF BODY, HANDS, TOOLS OR MATERIALS HE IS HANDLING WITHIN THIS RADIUS (LINES RATED 50KV AND BELOW), UNLESS POWERLINE IS FIRST DE-ENERGIZED. FOR LINES RATED OVER 50KV, CLEARANCE SHALL BE 72 INCHES PLUS 0.4 INCH FOR EACH KV OVER 50KV.

3. THE OCCUPATIONAL SAFETY AND HEALTH ACT (OSHA AND ASWC REQUIRES THAT NON-APS MACHINERY MAY NOT OPERATE WITHIN THIS RADIUS (LINES RATES 50KV AND BELOW), UNLESS POWERLINE IS FIRST DE-ENERGIZED. "MACHINERY" INCLUDES THE LOAD, CABLES, TAG LINES AND ANY OTHER ATTACHMENTS. OSHA REQUIRES THAT A PERSON MAY NOT GET ANY PORTION OF HIS BODY OR ANYTHING HE'S HANDLING WITHIN THIS RADIUS. FOR LINES RATED OVER 50KV, CLEARANCE SHALL BE 10 FEET PLUS 0.4 INCH FOR EACH KV OVER 50KV.

4. BUILDINGS ARE NOT PERMITTED UNDER APS FACILITIES.

RELATIONSHIP OF NESC, OSHA AND ARIZONA STATUTE CLEARANCE REQUIRMENTS AT THE SPAN

101.0 ABBREVIATIONS

AHJ	—	Authority Having Jurisdiction
ANSI	—	American National Standards Institute
APS	—	Arizona Public Servic
EUSERC	—	Electric Utility Service Equipment Requirements Committee
IAEI	—	International Association of Electrical Inspectors
IEEE	—	Institute of Electrical & Electronic Engineers
NEC	—	National Electrical Code (NFPA No. 70)
NECA	—	National Electrical Contractors Association
NEMA	—	National Electrical Manufacturers Association
NESC	—	National Electrical Safety Code
NFPA	—	National Fire Protection Association
OSHA	—	Occupational Safety and Health Act
U.L.	—	Underwriters Laboratories, Inc.

Note: When reference is made to any of the above codes, standards or regulations, it shall refer to the latest revision of same.

102.0 DEFINITIONS - FOR THE PURPOSE OF THIS MANUAL

102.1 AGENT

One who is authorized to act for another under a contract or relation of agency, either for Arizona Public Service Company, APS, or the Customer.

102.2 APPLICANT

The property owner, lessee, sub-lessee, their authorized agents and/or contractors applying for electric service from APS.

102.3 APPROVED

Acceptable to the Authority Having Jurisdiction (AHJ) over the matter.

102.4 BASEMENT

As defined for the purposes of this manual is the floor(s) located below ground level.

102.5 BUILDING

A structure which stands alone or which is cut off from adjoining structures by fire walls with all openings therein protected by approved fire doors.

102.6 CLEARANCE

Approval of the electrical installation by the inspection authority.

102.7 DISTRIBUTED GENERATION/GENERATOR

Any type of electrical generator or generating facility not owned or operated by APS that
(a) has the capability of being operated in electrical parallel with APS distribution system, or
(b) can feed a customer load that can also be fed by APS electrical system.

102.8 APS

Arizona Public Service Company

102.9 CONTRACTOR

Any person, company, or corporation acting under contractual agreements for either the Customer or APS.

102.10 CURRENT TRANSFORMER METERING - DEFINED

When Customer loads are 201 amperes and above, current transformers are connected directly to the service entrance conductors to ratio the primary current down to a secondary current which can be accurately registered on the meter. (Example: A 400 to 5 amp. C. T. has a ratio of 80 to 1. The reading on the KW and KWHR scales is then multiplied by the ratio value of 80, indicated as X 80 on the face of the meter, to give the actual load in KWs or KWHs.

102.11 CUSTOMER

The property owner, lessee, sub-lessee, their authorized agents and/or contractors receiving electric service from APS.

102.12 FIRST FLOOR

As defined for the purposes of this manual is the floor that is closest to the elevation of ground level and above ground level.

102.13 HIGH RISE BUILDING

A building with four floors or more above ground level.

102.14 METER

The equipment required including mounting facilities, instrument transformers, protective devices and me-ters to measure the electric demand and/or consumption requirements of the Customer.

102.15 METER ROOM

Meter rooms are defined as illuminated and ventilated rooms containing electric meters and electric service equipment. See Section 300 for regulations and restrictions of meter rooms.

102.16 MULTIPLE METER CENTER

A multiple metering unit where two or more customers are metered at a common location.

102.17 NOMINAL VOLTAGE

Designation of the value of the normal effective difference in potential between any two appropriate conductors of the circuit.

102.18 POINT OF ATTACHMENT

The location at which restraining or anchoring contact is made on a building or structure to support APS wires.

102.19 POINT OF DELIVERY

APS ownership of equipment ends at point when APS facilities are connected to customer facilities.

102.19-1 For UG primary metering APS ownership ends at the last cable termination point.

102.19-2 For OH primary metering APS ownership ends at the last pole the primary metering is installed.

102.19-3 For radial UG secondary service the APS ownership ends at the wire termination on the meter section.

102.19-4 For radial OH secondary service the APS ownership ends at the conductor connection at the top of the weather head.

102.19-5 Customer owns and maintains the underground conduit riser.

102.20 READILY ACCESSIBLE

Capable of being reached quickly and conveniently during all reasonable hours of operation, maintenance, inspection, testing or reading, without requiring climbing over or removing obstacles, obtaining special per-mission, keys or security clearances. Indoor meter locations require access from the exterior of the building.

102.21 RECOGNIZED TESTING LABORATORY

An electrical component testing laboratory nationally recognized: Example: UL, ETL, etc.

102.22 SELF-CONTAINED METERS

A self-contained meter is one which is capable of carrying the total current and voltage of the electric service supplied to the customer. This type of meter is connected directly to the service entrance conductors when it is plugged into the meter sockets.

102.23 SELF-CONTAINED METER SOCKETS

Sockets for use with self-contained meters are available in two approved ratings. When connected to properly sized service entrance conductors, the approved standard-duty socket has a nominal capacity of 100 amperes, and the approved heavy-duty socket has a nominal capacity of 200 amperes. (See Section 300).

102.24 SERVICE ENTRANCE

Customer’s service equipment together with APS metering equipment.

102.25 SERVICE ENTRANCE SECTION

A factory built floor standing service entrance.

102.26 SERVICE DROP

The overhead service conductors between APS secondary distribution system and the point of attachment to the building or other structure.

102.27 SERVICE ENTRANCE CONDUCTORS OVERHEAD SYSTEM

The conductors between the terminals of the service equipment and the point of connection with the service drop (Installed by Customer).

102.28 SERVICE ENTRANCE CONDUCTORS - UNDERGROUND SYSTEM

The conductors between the terminals of the service equipment and the point of connection to the service lateral or transformer (Installed by APS).

102.29 SWITCHBOARD

A service entrance rated for applications 600V and less.

102.30 SWITCHGEAR

A service entrance rated for applications greater than 600V.

102.31 TEMPORARY SERVICE

A temporary service is intended to be used for 12 months or less only for non-recurring service of a transitory character. APS shall determine whether the Customer's proposed installation is of a temporary nature.

102.32 THIRD PARTY

Persons or Companies other than APS or its employee.

102.33 VENTILATED

Provided with a means to permit circulation of air sufficient to remove an excess of heat. (NEC Article 100).

102.34 TOTALIZED METERING

Totalized Metering is the measurement of kw and kwh through one meter for billing purposes when multiple service entrance sections exist at a single premise.

103.0 ELECTRICAL TERMS

103.1 WATTS

Lamps and heating appliances are rated in watts to indicate the power which they will use. A 100 watt lamp in 10 hours will use 1000 watt-hours or 1 kilowatt hour (kwh) of energy. Likewise a 1000 watt flat iron in 2 hours will use 2000 watt-hours or 2 kilowatt hours (kwh) of energy.

103.2 KILOWATT (kw)

1000 watts.

103.3 KILOWATT-HOUR (kwh)

A quantity of electrical energy - equal to 1000 watts used continuously for one hour, or 100 watts used con-tinuously for ten hours, or equivalent.

103.4 HORSEPOWER (hp)

Motors are rated in horsepower, which is the mechanical output. Basically, 1 horsepower output requires approximately 1000 watts considering motor efficiency.

103.5 VOLTAGE (E)

Potential measured in volts.

103.6 CURRENT (I)

The rate of flow of electricity measured in amperes.

103.7 AMPACITY

Current-carrying capacity expressed in amperes.

103.8 APS VEHICLE ACCESS

A minimum 8 feet vertical and 11 feet horizontal clearance of drivable vehicle access is required from the public street to service point. Note, the APS vehicle access requirement is not required for single family residential dwellings.

104.0 SPECIAL CONSIDERATIONS

104.1 RESPONSIBILITY: USE OF SERVICE OR APPARATUS

APS and the customer assume all responsibility on their respective sides of the point of delivery for the elec-tric service supplied and taken, as well as for any apparatus used in connection therewith. Customer shall maintain SES equipment, inclusive of underground riser (UG), breakers, and switches.

Customer and APS each shall save the other harmless from and against all claims for injury or damage to persons or property occasioned by or in any way resulting from the electric service or the use thereof on their respective sides of the point of delivery. APS shall, however, have the right to suspend or terminate service in the event APS should learn of service use by Customer under hazardous conditions.

104.2 LINE DISTURBANCES

The operation of large flashing signs, welders, and furnaces, dielectric and induction heaters, reciprocating compressors and similar apparatus having intermittent flow of large currents sometimes interferes with other users of the electric service. The Customer shall consult APS in each case in order that the character of electric service that will be supplied, the corrective equipment needed, and other special precautions that must be taken, will be mutually known factors before planning to use such apparatus.

Radio and television transmitters, x-rays and similar equipment may be affected by normal disturbances on APS lines. The Customer should consult APS regarding proper type of service for this equipment.

104.3 MOTOR STARTING

The starting currents drawn from the source of supply by each rated size of alternating current motor (such values of currents to be determined by test or based on published data by the manufacturer) shall not exceed the allowable locked rotor current value for alternating current motors as given in the latest edition of the National Electric Code. Correction shall be allowed to adjust these current values so that they compensate for the difference between the terminal voltage and the rated voltage when applicable.

If the starting current of a motor exceeds the value given in the NEC, or creates undesirable service conditions, the Customer shall install, at his expense, a suitable reduced voltage or increment starting device to limit such starting current to the required values listed.

The values defined in the National Electrical Code apply only to motor types and nominal system voltages not exceeding those values quoted in these specifications. For types exceeding these quoted values and other information, consult with APS.

In some areas 208 and 240 volt motors larger than 25 HP and 480 volts motors larger than 75 HP shall be equipped with reduced voltage or increment starting devices to limit the starting currents. CHECK WITH APS.

The above-quoted specification may be modified to allow the use of across-the-line starting devices for larger motors by specific APS approval. Starters must conform to latest National Electric Manufacturer's Association Standards and installation must be in accordance with the National Electrical Code. Magnetic contactors in full voltage motor starters must have a coil capable of sealing in the contactor at 75% rated volt-age.

Customers installing motors 7.5HP or larger to a single phase system (i.e. 120/240V, 1Ø, 3W) shall check with APS prior to installation. This is in all cases whether the motor is being supplied single phase voltage or three phase voltage through a single phase to three phase conversion device. APS may need to perform a Motor Flicker Study and Fuse Coordination Study to determine the impact on the APS System. Customer will be asked to provide motor nameplate information (voltage, max output, motor code, FLA and power factor) and conversion device information if one is used. NOTE: a Motor Flicker Study and Fuse Coordination Study may be required by APS for three phase motors 25HP or larger connecting to any three phase system (i.e. 208Y/120V, 3Ø, 4W).

104.4 SERVICE INTERRUPTIONS

Arizona Public Service Company cannot guarantee uninterrupted service, and it is not APS policy to pay for damages that result from such interruptions, single phase conditions, or voltage fluctuations on our system occasioned by any cause beyond the reasonable care and control of APS.

The APS distribution and transmission system is designed to minimize potential problems but, as pointed out above, malfunctions and other external forces do cause occasional system failures. In these instances, may we suggest that compliance with the National Electrical Code, sound electrical engineer and prudent use of properly sized, installed and maintained protective devices will protect your equipment.

For detailed information on how to protect your electrical equipment, contact an electrical contractor, equipment manufacturer, pump company, an electrical engineer, or your local APS office.

104.5 POLYPHASE MOTOR PROTECTION

The following protective devices are required and/or strongly recommended by APS and shall be installed and maintained by the Customer:

1. Three element running overload protection shall be required on all motors; i.e., one overload element in each phase in the starter or equivalent protection devices. (per NEC).
2. All motor controllers shall be arranged so that in event of sustained loss in voltage, the motor will be dis-connected from the line, unless it is equipped for automatic starting after such failure. Where continuous operation of motorized equipment is essential, motor controllers shall provide for motors to operate through a transient no voltage condition lasting for 1/2 second. Consult with APS where problems of this nature may be encountered.

The recommended devices listed below are strongly suggested to markedly reduce the possibility of damage to your polyphase equipment.

3. Low voltage protection is recommended on all polyphase motors.
4. Phase reversal protection is recommended in all polyphase motors for elevators, cranes and well-pump motors.
5. Phase failure protection is recommended on all polyphase motor circuits.

PLEASE NOTE: Some manufacturers supply a different device for each type of protection, while other may offer a single device that provides complete protection.

104.6 COMPUTER PROTECTION

Electronic computers are sensitive to momentary voltage fluctuations oftentimes referred to as “blips” or “spikes.” These may be created within the Customer’s service through motor starts or other electric load turn-ons. This may also occur external to the Customer’s service as a result of routine APS switching or fault clearance.

APS cannot assure a Customer that the electric service will be free of momentary voltage fluctuations. If this is a Customer concern, it is recommended that the Customer provide an interface between the electric service to the computer and the computer to screen out unwanted voltage fluctuations.

104.7 SIGNAL DISTORTION

In general, the operation of any electrical device or system should not cause excessive distortion of the utility voltage waveform or result in excessive injection of harmonic currents into the utility system to the detriment of APS, its customers, or other electric utilities. APS requires that all installations comply with IEEE 519 guidelines. APS reserves the rights to test the equipment to ensure compliance to these guidelines. Even though equipment may be found to be in compliance with these guidelines, if it can be shown that said equipment is the source of problems for other customers, for APS, or for other utilities within the interconnected power system, APS reserves the right to require remedial action be taken by the owner.

104.7-1 HARMONIC STUDY POLICY

In the event Customer installs or causes to be installed Variable Frequency Drives (VFD), APS will require Customer to provide a harmonic study for any system with 750 HP aggregate or greater of motors. Any aggregate system less than 750 HP and greater than 100 HP, which utilizes less than 18 pulse rectifiers, will also be required to perform a harmonic study. The purpose of the harmonic study is to ensure the VFD created harmonic currents are not amplified by resonance conditions caused by capacitors switching or system load conditions.

The Customer shall, in accordance with Section 5.6 of Service Schedule 1, exercise reasonable care to ensure that the electrical characteristics of its load, such as deviation from sine wave form (a minimum standard is IEEE 519) or unusual short interval fluctuations in demand, shall not impair service to other Customers or interfere with operation of telephone, television, or other communication facilities. In the event APS determines the source of the problem to be Customer related (i.e. electrical equipment) it is the Customer's responsibility to remedy the issue satisfactory to APS. In addition, Customer must also meet at a minimum IEEE 519, Section 104.7.1 of the APS ESRM and Section 8.4(C) of the APS Interconnection Requirements.

APS will provide the following information to the Customer once the Customer provides a detailed one-line of their system:

1. Short Circuit duty and Thevenin impedance of each possible system configuration which could supply the Customer's VFD. This will include the feeder impedance from the Customer's location to the 69/12 kV substation bus or transformer.
2. Substation transformer winding configuration, its impedance and any parallel transformers with their specifications.
3. Parallel feeder information, any other non-linear loads associated with the feeders from the substation and any other significant VFDs or non-linear loads for parallel feeders.
4. Impedance of each feeder section, between each significant node.
5. Capacitor location(s), size(s) and connection(s).
6. Regulator bank location(s), size(s) and connection(s).
7. Secondary service transformer(s), kVA rating(s), voltage(s) and impedance(s).
8. Service conductor type, estimated length and impedance.

Customer shall provide a completed harmonic study to APS with the following information:

1. System conditions (assumptions) along with loading at start up including full load and at steady state.
2. Any expected load growth and unbalance assumptions.
3. THD levels in accordance with IEEE 519 for all assumptions (best and worst case at all load conditions).
4. Various combinations of shunt capacitors on line and various load levels of the associated feeders.
5. All resonances in the system up to 49th harmonic.

APS will determine if the study meets APS requirements and will either accept the study or require additional analyses. APS will inform the Customer in writing the status of the Customer provided harmonic study af-ter APS review. APS may also request clarifying information from the Customer regarding the approach, scope, and/or assumptions regarding the Customer provided harmonic studies. Lastly, the customer may be required to reconfigure its system should APS make changes to the configuration of its System.

104.8 AIR CONDITIONING - REMOTE (SPLIT) SYSTEMS

Blower motors *larger than 1/3 HP* in the furnace of the air handler shall not be connected to 120 volts. If the blower cannot be connected for 240 volt operation, either the compressor or blower shall be time delayed to prevent them from starting simultaneously.

104.9 CONTROL CIRCUITS

On three phase four wire Delta circuits, no control devices or single phase loads shall be connected to the power (wild) leg.

104.10 SPECIAL CASE TESTING

On installations where there is no county or municipal inspection authority, APS reserves the right to require that the customer's service entrance equipment be tested for insulation breakdown prior to it being ener-gized. This test is to assure that the service entrance equipment is free of all shorts or grounds.

Service equipment rated at 400 amperes or more shall withstand for a period of one minute without break-down, the application of a 60-hertz alternating potential of 1000 volts plus twice the rated phase-to-phase voltage of the device. This test shall be performed between all phases to ground and phase to phase.

A certified "hi-pot test" may be performed and a certificate issued to APS or a hi-pot test performed in the presence of qualified APS personnel.

104.11 CUSTOMER GENERATION

Any customer either on-site or temporary generator system shall be submitted and approved through APS' online customer portal (i.e., PowerClerk) prior to energization.

Customer generation, for the purpose of this section, is defined as any type of distributed generator or generating facility not owned or operated by APS, which has the potential (a) for feeding a customer load, where this load can also be fed by, or connected to, the APS power system, or (b) for electrically paralleling, or feeding power back into the APS power system.

The term "Customer", as used in this section, shall be construed to also include any independent party or entity that either invests in, or owns or operates a distributed generator or generating facility.

Customer generators include induction and synchronous electrical generators and any type of electrical inverter capable of producing A/C power. An Emergency or Standby Generation System is designed so as never to electrically interconnect or operate in electrical parallel with APS system. An Interconnected Generation System is defined as any generator or generation system that can parallel, or has the potential to be paralleled via design or normal operator control, either momentarily or on a continuous basis, with the APS system.

Refer to the APS Interconnection Requirements as well as several guides, tools, and sample diagrams for distributed generation that are available on the APS website at aps.com/dg.

104.11-1 EMERGENCY OR STANDBY GENERATORS

Emergency or standby generators supplying a premises wiring system shall be connected through a permanently installed transfer switch meeting all the following conditions:

(1) Be a double-throw, break-before-make type.

(2) Be listed for the intended use.

(3) Provide positive isolation between the generator source and the electric utility source.

(A) Equipment certification and assembly.

(1) Complete assembly. All transfer equipment shall be tested, listed, and labeled to UL 1008 as a complete factory assembly.

(2) Prohibited equipment and interlock exceptions. Altered or fieldmodified circuit breaker enclosures, open-frame retrofits, and fieldinstalled mechanical interlock kits shall not be utilized as primary transfer equipment for emergency systems.

(a) Temporary source connection. Trapped-key interlock assemblies shall be permitted only for the connection of a temporary alternate source of power in accordance with NEC 700.3(F).

(b) Primary transfer equipment. Individual circuit breakers equipped with mechanical handle interlocks shall not be substituted for listed transfer switch equipment required by NEC 700.5.

(B) System grounding and operational requirements.

(1) Separately derived system. For single-phase three-wire and threephase four-wire systems with neutral-to-ground bonds at each source, the transfer switch shall switch the neutral connection. This isolates the two power sources and legally establishes the generator as a separately derived system required by APS.

(2) Shock hazard mitigation. The generator neutral shall be permanently bonded to the generator frame and shall not be removed or left floating. This bond eliminates the shock hazard and inherent neutral backfeed caused by disconnecting the neutral-toground link in the service entrance section (SES) during a planned outage.

(3) Three-pole applications. Three-pole transfer switches lack a neutral pole and shall be strictly limited to topologies completely devoid of a distributed neutral conductor:

(a) Three-phase, three-wire delta configurations.

(b) Ungrounded configurations.

(c) Low- or high-impedance grounded configurations.

(4) Open transition requirement. The transfer switch shall always disconnect the customer's critical load from the APS power system prior to connecting it to the generator. Conversely, the transfer switch shall also disconnect the load from the generator prior to reconnecting it back to the APS system.

(5) Backfeed prevention. Portable generators shall not be connected to a premises wiring system unless a permanently installed and approved transfer switch is utilized to isolate the premises from the utility source.

Informational Note: Improper connection can result in electric current backfeeding into the utility grid through distribution transformers, stepping up to a high voltage that poses a potentially fatal shock hazard to field personnel.

(C) Submittal and engineering requirements. Customers installing a manual or automatic transfer switch are required to provide the following documentation to APS for review prior to ordering equipment:

(1) UL 1008 certification. Provide manufacturer documentation verifying that the transfer switch is a factory-assembled, open-transition mechanism tested, listed, and labeled under UL 1008. The submittal shall explicitly state the switch's specific Ampere Interrupting Capacity (AIC) rating.

(2) Fault current analysis. Provide an engineering analysis stamped and signed by the Engineer of Record (EOR). The analysis shall prove the system meets the following safety criteria:

(a) Protection Speed: The upstream normal-source overcurrent protective device (OCPD) shall clear faults faster than the withstand rating of the transfer switch.

(b) Manufacturer Verification: The EOR shall explicitly cross-reference the OCPD clearing specifications against the manufacturer’s close and withstand tables.

(c) Calculated Data: All safety margins shall be based on the calculated available fault current at the physical location of the transfer switch.

(3) System diagram. A comprehensive one-line diagram of the electrical system showing all interlocking, grounding, and source-separation details in accordance with the National Electrical Code (NEC) and APS Requirements.

104.11-1 EMERGENCY OR STANDBY GENERATORS (CONTINUED)

(D) Placards/Warning Labels

Emergency or Standby Generators that operate in an open transition mode by means of an automatic transfer switch as described herein are required to include a warning sign with the following information located at the SES:

WARNING

1. AN EMERGENCY/STANDBY GENERATOR IS LOCATED ON THE PROPERTY.
2. REMOVAL/LOSS OF UTILITY POWER WILL INITIATE GENERATOR START UP.
3. AUTOMATIC TRANSFER SWITCH (ATS) SHALL PREVENT GENERATOR FROM BACKFEEDING THE ELECTRIC SERVICE.

All labels shall consist of a permanently attached weatherproof/UV resistant placard, letters shall be engraved or embossed/raised, and letters will be a minimum of 1/4 inch tall. Labels shall be securely attached to the applicable equipment as long as the attachment means does not violate the UL Listing of the equipment. Labels shall be made of (a) aluminum, brass or other approved corrosive resistant metal, or (b) a high-density polyethylene material 55 mils thick comprised of a 35 mil black polyethylene base film capped (co-extruded) with a 20 mil color polyethylene. Labels should follow the ANSI Z535.1 -2011 color codes when applicable.

104.11-2 INTERCONNECTED GENERATORS

Interconnected generators encompass any type of Customer generator or generating facility that can electrically parallel with, or potentially backfeed into the APS system. Additionally, any generator system using a “closed transition” type transfer switch, multi breaker transfer scheme, or an electrical inverter that can be configured or programmed to operate in a “utility interactive mode” constitute a potential backfeed source to the APS system, and are classified as an interconnected generator.

APS has specific Interconnection Requirements that shall to be complied with for all interconnected generators. These include a visible open disconnect meeting certain requirements to isolate the Customer’s system from the APS system, as well as protective relaying, metering, special rate schedules, and other safety and information requirements. Customer rack-out breakers do not meet the visible open requirements for alternate power source. The Customer will also be responsible for having the generation system protective schemes tested by a qualified testing/calibration company. Qualified APS personnel will need to inspect the system and the Customer will need to sign an Interconnection Agreement with APS. Each proposal for an interconnected generator will be reviewed by APS on a case by case basis. APS does not extend “blanket approval” to any specific type of generator or generator scheme since each project review is site specific.

A line (supply) side tap constitutes a new service as defined by the National Electrical Code (NEC), and is subject to all applicable NEC requirements and/or requirements adopted by the Authority Having Jurisdiction. Any line side tap shall be made without any modifications to any factory installed and/or factory listed equipment or components, unless such tap is expressly authorized by the manufacturer and/or listing agency, and performed in strict accordance with the manufacturer’s directions and specifications.

104.11-2 INTERCONNECTED GENERATORS (CONTINUED)

Anyone contemplating installing an interconnected generator should contact their local APS office for further details. A copy of the APS Interconnection Requirements for Distributed Generation and supplementary information can be accessed by visiting www.aps.com/dg.

PLACARDS / WARNING LABELS:
Interconnected Generators are required to include a warning sign with the following information located at the SES:

WARNING

1. AN INTERCONNECTED GENERATOR IS LOCATED ON THE PROPERTY.
2. REMOVAL/LOSS OF UTILITY POWER WILL INITIATE GENERATOR START UP.
3. FOLLOW PROPER LOCK-OUT / TAG-OUT PROCEDURES TO ENSURE GENERATOR SYSTEM UTILITY DISCONNECT IS OPEN PRIOR TO PERFORMING WORK ON THIS DEVICE.

All labels shall consist of a permanently attached weatherproof/UV resistant placard, letters shall be engraved or embossed/raised, and letters will be a minimum of 1/4 inch tall. Labels shall be securely attached to the applicable equipment as long as the attachment means does not violate the UL Listing of the equipment. Labels shall be made of (a) aluminum, brass or other approved corrosive resistant metal, or (b) a light density polyethylene material 55 mils thick comprised of a 35 mil black polyethylene base film capped (co-extruded) with a 20 mil color polyethylene. Labels should follow the ANSI Z535.1 - 2011 color codes when applicable.

104.12 PROTECTION AND ISOLATION REQUIREMENTS FOR MULTIPLE UTILITY SERVICES TO A CUSTOMER FACILITY

In instances when APS serves a customer facility from two or more separate electrical sources (services), it is necessary to ensure that:

(a) The APS sources are not under any circumstances paralleled or in any way electrically connected to-gether by the customer through the customer's equipment. Paralleling of APS sources by the customer can lead to the following conditions: fault current exceeding the fault duty rating of affected equipment; circulating currents in both the APS feeders and the customer's equipment due to voltage difference and/or phase imbalance between the sources; and reduced reliability of APS service in that a fault on one feeder will affect the other(s).

(b) Suitable isolation devices are incorporated into each of the customer's service entrance sections for the purpose of ensuring that each APS service, including the metering compartment, can be isolated from all other APS sources feeding the facility that can present a potential back-feed source to APS personnel.

(c) Adherence to this four-stage equipment and testing process is required:

- Key interlocks for manual systems or programmed controllers for automated systems
- Hard Wired Circuit Breaker Interlocks
- Utility Disconnect installed in accordance with Section 8.2 of the APS Interconnection Requirements
- Test Script shall be drafted by APS or the Customer for APS review and approval, prior to the execution of a witness test.

104.12-1 INTERLOCKS

To ensure that two or more APS sources are never paralleled or electrically connected together by the customer within the customer's facility, customer shall install suitable interlocks between the associated switches or breakers in all customer facility circuit arrangements that constitute, or could constitute, a transfer scheme between the utility power sources (e.g. "Main-Tie-Main" or "Main-Tie-Tie-Main"). The interlock scheme(s) shall prevent the simultaneous closing of all of the breakers in any such switch or breaker arrangement, and ensure that any load transfer between the utility power sources is always accomplished in an open-transition ("break-before-make") transfer mode.

In the event that manually-operated switches are used to effect a transfer between APS sources, and it is not physically possible to key - or otherwise interlock these switches, then the customer may, subject to prior APS approval, utilize written operating procedures along with suitable operational controls to effect a transfer of load between the sources. The customer will be responsible for establishing, maintaining and using written operating procedure(s) that govern the operation of all affected switches. The procedure(s) shall ensure that these switches will always be operated in such a manner to ensure an "open-transition" transfer between the utility power sources. In addition, such switches will remain locked by means of secure padlocks under the customer's operational control. Suitable placards will be installed at each affected switch, identifying the switch and cautioning that it is only to be operated in strict accordance with established written operating procedure(s).

Note that the requirements specified in this section do not apply to a network service or other paralleling arrangement that is under APS' operating jurisdiction and that has been specifically designed and installed to allow for paralleling of APS sources.

104.12-2 ISOLATION DEVICES

To protect APS personnel from potential electrical backfeed when it is necessary to electrically isolate APS-owned equipment on any given service to a customer facility that is supplied by two or more utility sources, the customer shall install and maintain a suitable isolation device(s) on each of the service entrance section main buses. The isolation device shall meet all the requirements specified in Section 8.2 of the APS document entitled "Interconnection Requirements for Distributed Generation" including grounding requirements and the establishment of an "Operating Agreement" for systems with a line voltage over 500 V. A copy of this document can be accessed by visiting www.aps.com/dg.

A customer facility receiving utility service under 500 V, and utilizing only a double-throw transfer switch to effect the transfer of load between the utility sources and between any separately sourced circuits within the customer facility, is exempt from the requirements of this section, provided that the transfer switch: (a) is of a true double-throw, break-before-make, fail-safe mechanical throw-over design, which will not under any circumstances allow the utility sources to be paralleled; (b) is listed to UL1008; and (c) is not comprised of a multi-breaker scheme, irrespective of any interlocking scheme used between the breakers.

Note that for any APS service to a customer facility at a voltage above 500V, irrespective of the number of services to the facility, or the type of transfer scheme(s) used, the customer is required to provide a suitable isolation device in accordance with drawing numbers 401/APS-1 and 401/APS-2 specified in Section 1100 of this manual.

104.12-3 Multiple Utility Services Transfer Equipment

(A) General. Any alternate power source design, either APS or customer owned, permanent or portable, shall be submitted and approved prior to energization. Where multiple utility feeders are utilized, the transfer equipment shall be configured to permit connection to only one utility source at any given time.

(B) Listed Systems. Transfer equipment between the serving utility sources and/or an alternate power source shall be listed. The listing for transfer equipment shall be UL 98, UL 1008, or UL 1008A.

(C) Unlisted Systems. If a listing for transfer equipment is not available or practical, such as in main-tie-main or main-tie-tie-main arrangements, the system shall comply with 104.12-3(C)(1) through (C)(6).

(1) *Interlocks.* Manual systems shall be equipped with mechanical key interlocks. Automated systems shall utilize auxiliary "b" contacts from each circuit breaker to provide a block-close signal to the close coil of the other circuit breakers.

(2) *Bypass Restrictions*. Electrical bypass of the interlocking system by means of an electrical push button, switch, or similar device shall be prohibited.

(3) *Control Defeat Plates.* Factory-installed control defeat plates shall be provided over the circuit breaker manual close push buttons.

(4) *Warning Sign*. An ANSI-compliant warning sign shall be permanently installed adjacent to the breaker control defeat plates. The sign shall display the following text:

WARNING

HAZARD OF ELECTRIC SHOCK, EXPLOSION, OR ARC FLASH
DO NOT DEFEAT INTERLOCKS OR FORCE MANUAL CLOSE.
PARALLELLING UTILITY FEEDRS IS PROHIBITED.
Bypassing safety controls can cause equipment damage, severe injury, or death.

(5) *Test Script*. A comprehensive test script to verify and validate the above requirements shall be reviewed and accepted prior to the installation of the system.

(6) *Testing*. Witness testing shall be provided and performed in accordance with the approved test script.

Informational Note: See APS Interconnection Requirements for additional information.

105.0 SPECIAL WORK REQUEST FOR THIRD PARTY

1. When a third party must perform work near overhead lines or equipment and the work cannot be performed outside of the minimum clearance distance (see appendix C page 257 from the APM book); one of the following must be done:
    a. De-energize line or equipment, establish a clearance, issue clearance form, & ground the line (when no system neutral is present the line shall be removed), and the Third Party Authorized Representative signs the proper form.
    b. Permanently relocate the existing line, or
    c. Temporarily re-route existing line to provide necessary minimum clearance distance.
2. If a third party will be performing work near energized line (but not within the minimum clearance distance), it may be appropriate to install insulating barriers as additional precautionary methods taken and have the Third Party Authorized Representative sign.
3. If method 1 (a) or 1 (c) is used, this condition shall remain in effect until a Third party Authorized Representative notifies the company the work is completed and sign proper release form.